CUSTOM®
fluidpower
A HELIOS TECHNOLOGIES COMPANY

CUSTOM SAFE BRAKES

CSB200

The CSB 200 is a spring applied / hydraulic release brake caliper, fail-safe disc brake with a clamping force up to 12kN.

- Designed in Australia for the harsh mining and marine environments
- Mechanical safety lockout
- On / Off and pad wear switches on both caliper halves. Various configurations
- Organic or sintered metal brake pads.

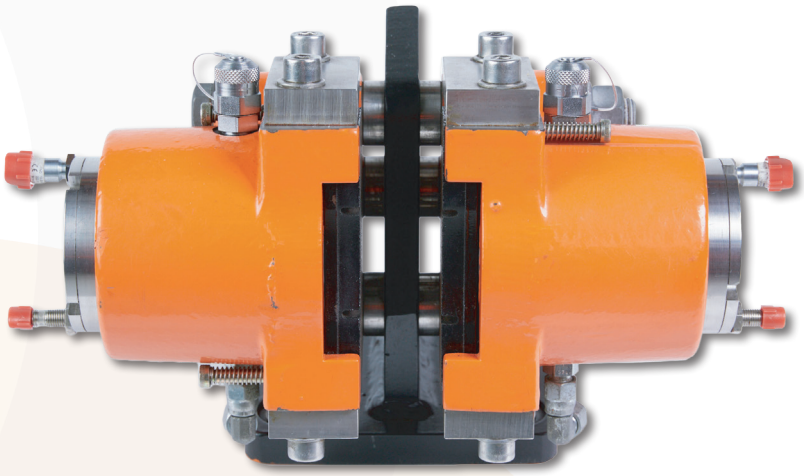

COMMON FEATURES

Weight excl. Bracket (kg)	**21**
Bracket Weight (kg)	**5**
Brake pad width (mm)	**68**
Area brake pad Organic cm^2	**80**
Max wear of pad Sintered Metal cm^2	**54.5**
Max wear of pad half mm	**8**
Pressure connection ports BSPP	**2x1/8˝**
Drain connection ports BSPP	**1x1/8˝**
Min pipe size (mm,ID)	**8**
Max operating pressure (bar)	**230**
Temperature range ºC	**-20 to 70**
Minimum Disc thickness (mm)	**15**
Minimum Disc diameter (mm)	**300**
Max outer coupling diameter (mm) = disc diameter less	**180**

CSB CODE CSB **2** **10** **30** **D** **100**

BRAKE SERIES

200 Series	2xx
300 Series	3xx
3000H Series	3xxx
5000 Series	5xxx

SPRING FORCE kN

200 Series	0.5 to 12
300 Series	10 to 60
3000H Series	10 to 160
5000 Series	50 to 275

BRACKET OPTION

No Bracket	A
90º Bracket	B
Special Bracket	C
STD Bracket	D

DISK THICKNESS (mm)

STD =	30

DEVIATION CODE

No Switches	100
On / Off Switches Only	101
Pad Wear & On / Off Switches PNP	102
Pad Wear & On / Off V/F	105/115
4-20mA Switches	110

Caliper Model	Clamping Force N	Braking Force N	% Force loss/mm %	Balance Pressure @ 1mm bar	Pressure at full retraction bar
200.5	500	400	7%	4	5
201	1000	800	9%	8	12
202	2000	1600	2%	16	19
203	3000	2400	5%	24	29
204	4000	3200	3%	32	36
205	5000	4000	8%	40	46
206	6000	4800	6%	48	56
207	7000	5600	4%	56	65
208	8000	6400	5%	64	70
209	9000	7200	4%	72	77
210	10000	8000	6%	80	92
211	11000	8800	12%	88	106
212	12000	9600	11%	96	112

CUSTOM SAFE BRAKES
INTELLIGENT BRAKING.

CUSTOM SAFE BRAKES
INTELLIGENT BRAKING.

Technical Images

CSB200

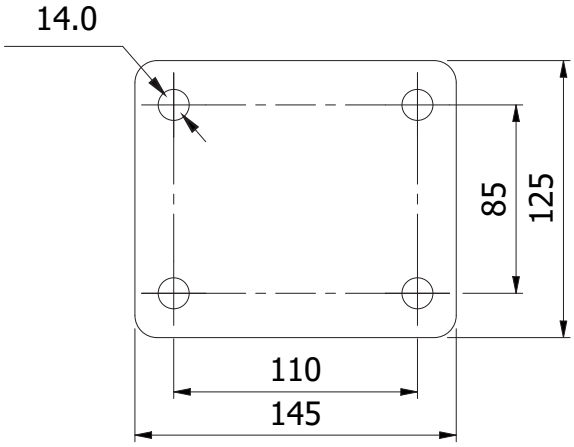

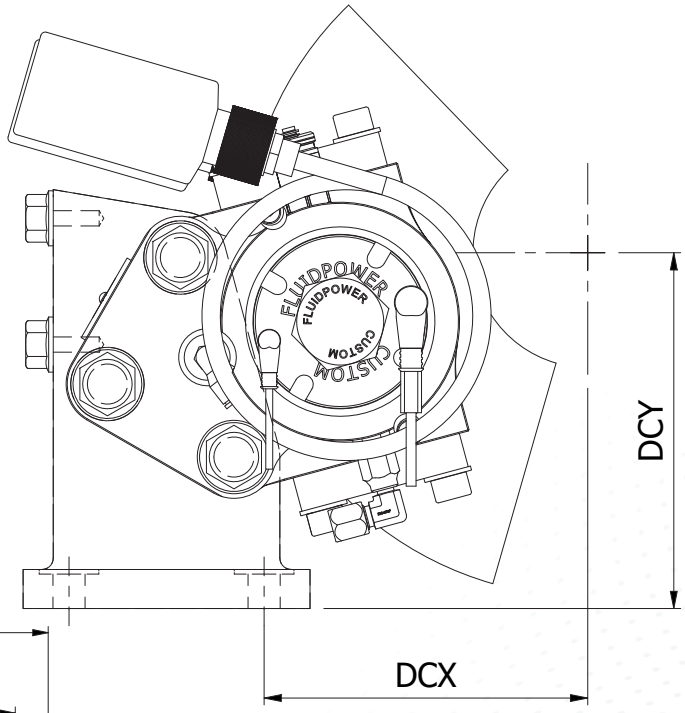

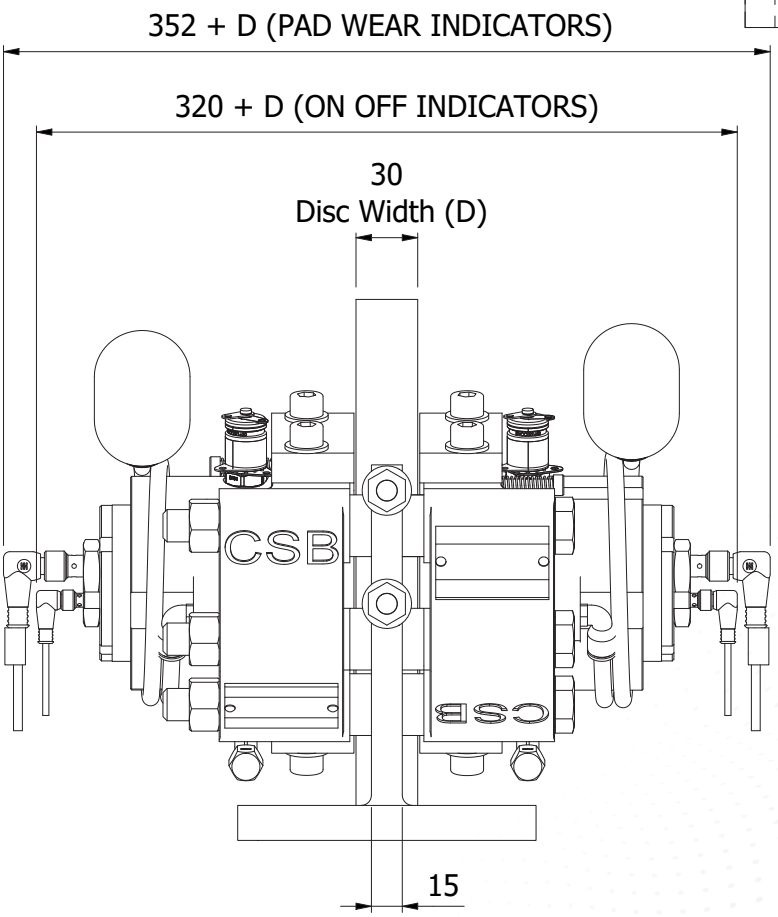

CALIPER MOUNTING DIMENSIONS

DCX = (DISC RADIUS - 35) X (0.966) + 30

DCY = (DISC RADIUS - 35) X (0.259) + 125

CSB300

The CSB 300 is a spring applied / hydraulic release brake caliper, fail-safe disc brake with a clamping force up to 60kN.

- Designed in Australia for the harsh mining and marine environments
- Mechanical safety lockout
- On / Off and pad wear proximity switches on both caliper halves
- Organic or sintered metal brake pads.

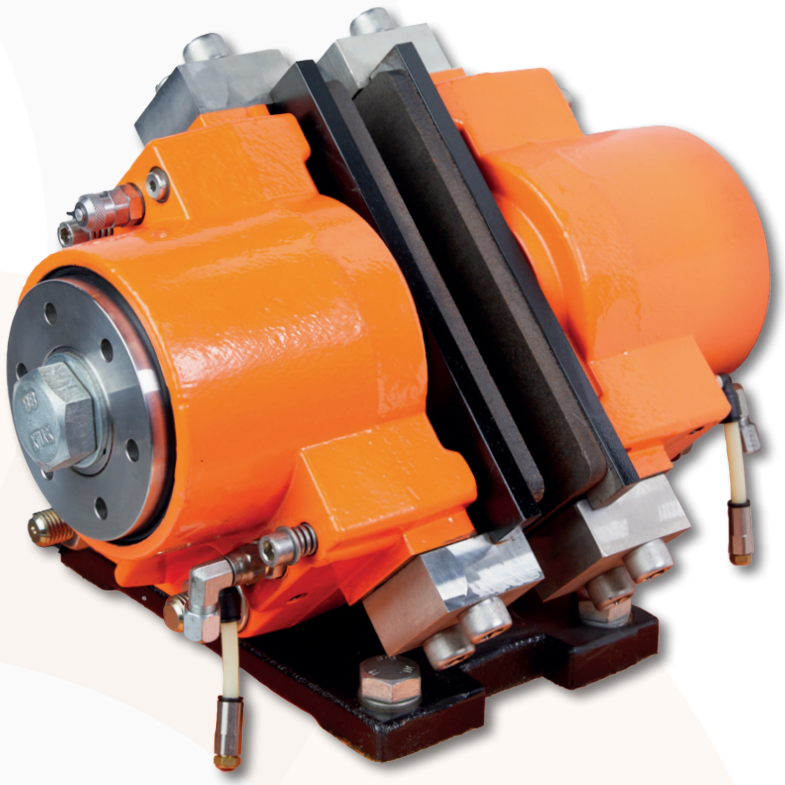

COMMON FEATURES

Weight excl. Bracket (kg)	**68**
Bracket Weight (kg)	**24**
Brake pad width (mm)	**130**
Area brake pad Organic cm^2	**290**
Max wear of pad Sintered Metal cm^2	**200**
Max wear of pad half mm	**10**
Pressure connection ports BSPP	**2x1/4˝**
Drain connection ports BSPP	**1x1/8˝**
Min pipe size (mm,ID)	**8**
Max operating pressure (bar)	**230**
Temperature range ºC	**-20 to 70**
Minimum Disc thickness (mm)	**20**
Minimum Disc diameter (mm)	**500**
Max outer coupling diameter (mm) = disc diameter less	**300**

Caliper Model	Clamping Force N	Braking Force N	% Force loss/mm %	Balance Pressure @ 1mm bar	Pressure at full retraction bar
310	10000	8000	4%	14	16
312	12000	9600	3%	17	18
315	15000	1200	4%	22	23
317	17000	13600	2%	25	26
320	20000	16000	5%	29	34
322	22000	17600	5%	32	35
325	25000	20000	4%	36	39
327	27000	21600	3%	39	43
330	30000	24000	3%	43	47
335	35000	28000	4%	51	55
337	37000	29600	2%	54	57
340	40000	32000	4%	58	64
345	45000	36000	3%	65	69
350	50000	40000	6%	72	80
355	55000	44000	5%	80	86
360	60000	48000	4%	87	94

CSB CODE CSB **3** - **30** **D** **100**

BRAKE SERIES

200 Series	2xx
300 Series	3xx
3000H Series	3xxx
5000 Series	5xxx

SPRING FORCE kN

200 Series	0.5 to 12
300 Series	10 to 60
3000H Series	10 to 160
5000 Series	50 to 275

BRACKET OPTION

No Bracket	A
90º Bracket	B
Special Bracket	C
STD Bracket	D

DISK THICKNESS (mm)

STD =	30

DEVIATION CODE

No Switches	100
On / Off Switches Only	101
Pad Wear & On / Off Switches PNP	102
Pad Wear & On / Off V/F	105/115
4-20mA Switches	110

CUSTOM SAFE BRAKES
INTELLIGENT BRAKING.

CUSTOM SAFE BRAKES
INTELLIGENT BRAKING.

Technical Images

CSB300

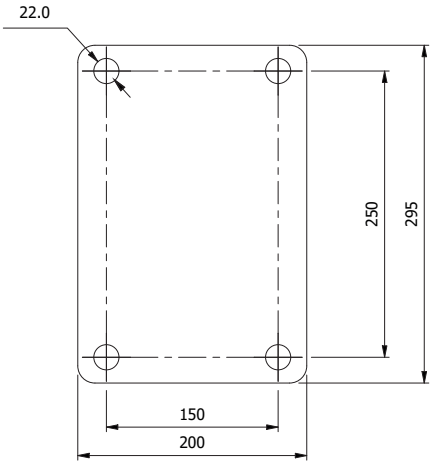

BRACKET MOUNTING DIMENSIONS

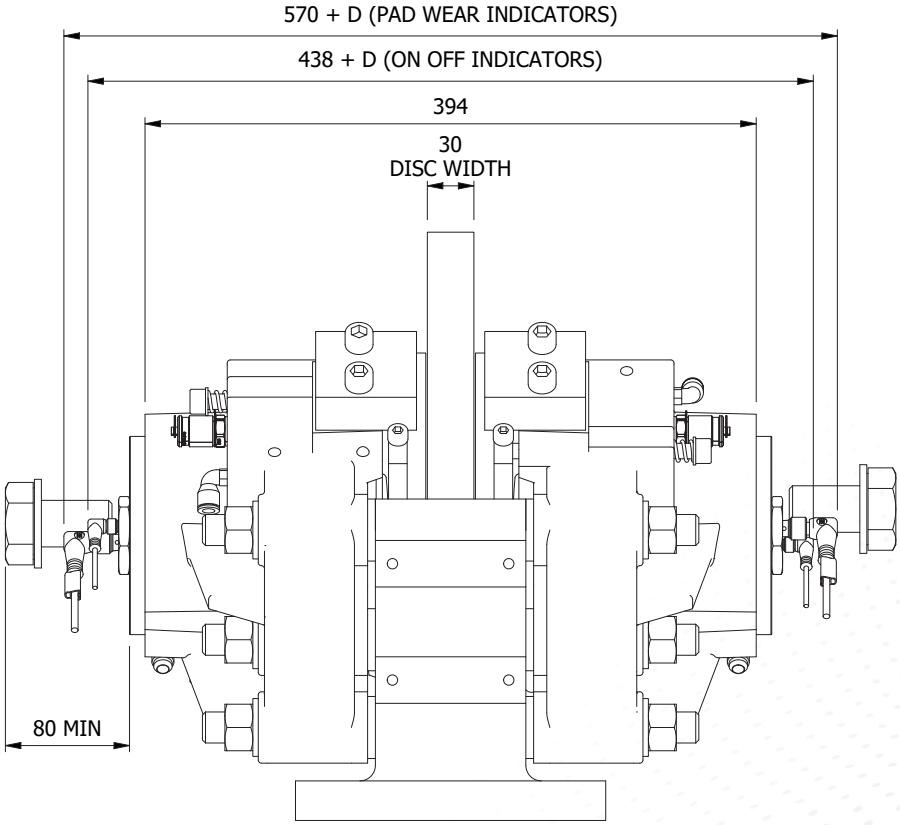

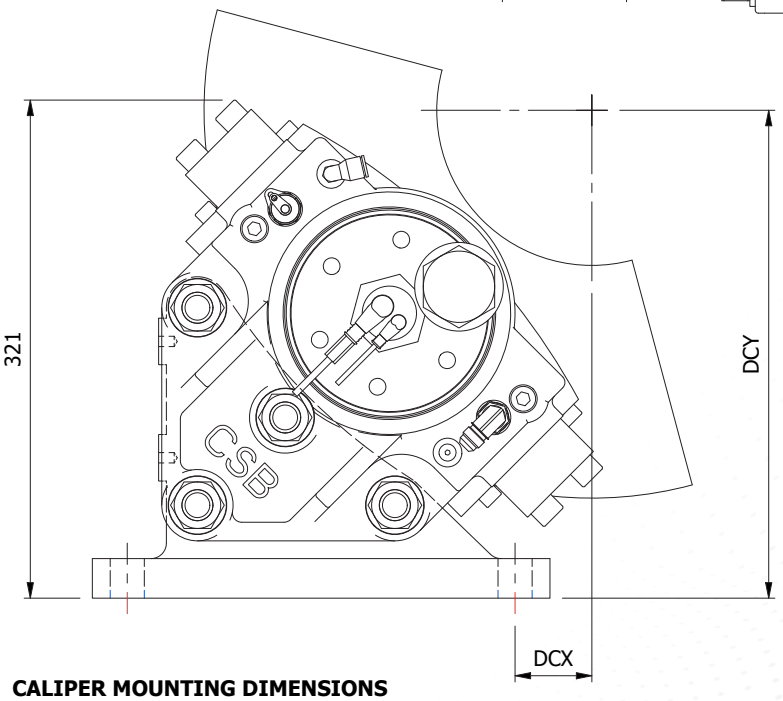

CALIPER MOUNTING DIMENSIONS
DCX = DCY - 265
DCY = (DISC RADIUS + 195) X 0.707

CSAB200

The CSAB 200 Monospring is a spring applied / hydraulic release brake caliper, self-adjusting, fail-safe disc brake with a clamping force up to 12kN.

- Smaller footprint on one side of disc
- Pad wear compensation is automatic. A fixed air gap is maintained throughout the life of the pad
- Optimised spring force through automatic adjustments
- On/off and pad wear switches
- Foot brackets to suit most common 200 series Caliper replacements. ***Specials on request***
- Standard 200 series pads used
- Designed and manufactured in Australia, for the harsh mining and marine environments.

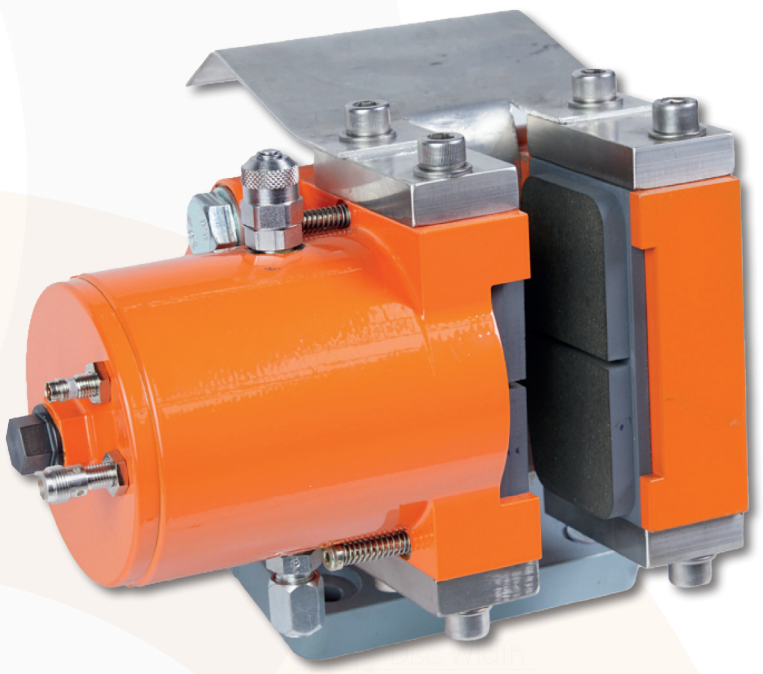

COMMON FEATURES

Weight excl. Bracket (kg)	**21**
Bracket Weight (kg)	**5**
Brake pad width (mm)	**68**
Area brake pad Organic cm^2	**80**
Max wear of pad Sintered Metal cm^2	**54.5**
Max wear of pad half mm	**8**
Pressure connection ports BSPP	**2x1/8˝**
Drain connection ports BSPP	**1x1/8˝**
Min pipe size (mm,ID)	**8**
Max operating pressure (bar)	**230**
Temperature range ºC	**-20 to 70**
Minimum Disc thickness (mm)	**15**
Minimum Disc diameter (mm)	**300**
Max outer coupling diameter (mm) = disc diameter less	**180**

Caliper Model	Clamping Force N	Braking Force N	% Force loss/mm %	Balance Pressure @ 1mm bar	Pressure at full retraction bar
200.5	500	400	7%	4	5
201	1000	800	9%	8	12
202	2000	1600	2%	16	19
203	3000	2400	5%	24	29
204	4000	3200	3%	32	36
205	5000	4000	8%	40	46
206	6000	4800	6%	48	56
207	7000	5600	4%	56	65
208	8000	6400	5%	64	70
209	9000	7200	4%	72	77
210	10000	8000	6%	80	92
211	11000	8800	12%	88	106
212	12000	9600	11%	96	112

CSAB CODE CSAB **2** **10** **30** **D** **100**

BRAKE SERIES

200 Series	2xx
300 Series	3xx
3000H Series	3xxx
5000 Series	5xxx

SPRING FORCE kN

200 Series	0.5 to 12
300 Series	10 to 60
3000H Series	10 to 160
5000 Series	50 to 275

BRACKET OPTION

No Bracket	A
90º Bracket	B
Special Bracket	C
STD Bracket	D

DISK THICKNESS (mm)

STD =	30

DEVIATION CODE

No Switches	100
On / Off Switches Only	101
Pad Wear & On / Off Switches PNP	102
Pad Wear & On / Off V/F	105/115
4-20mA Switches	110

CUSTOM SAFE BRAKES
INTELLIGENT BRAKING.

CSAB300

The CSAB 300 is a spring applied / hydraulic release brake caliper, self adjusting, fail-safe disc brake with a clamping force up to 40kN

- Pad wear compensation is automatic. A fixed air gap is maintained throughout the life of the pad
- Optimised spring force through automatic adjustments
- Less maintenance required over traditional brake units
- The requirement for pad replacement is signalled to the operator electronically via our unique switching mechanism
- On/off, pad wear proximity switches or analogue transmitters are available on both caliper halves
- The CSAB is fully interchangeable with other brake calliper brands
- External components are epoxy coated
- The CSAB pad options include an organic compound or a sintered metal version
- Designed and manufactured in Australia, for the harsh mining and marine environments.

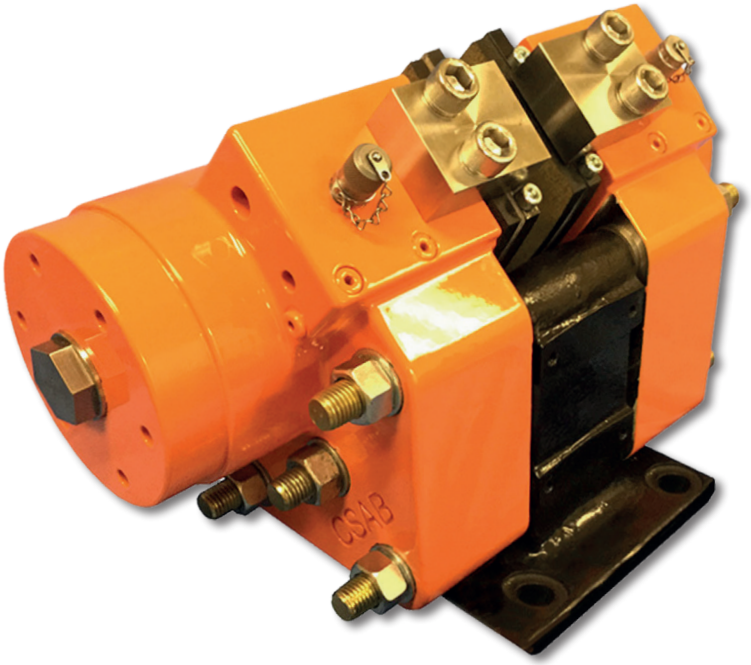

CSAB CODE CSAB **3** **00** **30** **D** **100**

BRAKE SERIES	
200 Series	2xx
300 Series	3xx
3000H Series	3xxx
5000 Series	5xxx

SPRING FORCE kN	
200 Series	0.5 to 12
300 Series	10 to 60
3000H Series	10 to 160
5000 Series	50 to 275

BRACKET OPTION	
No Bracket	A
90º Bracket	B
Special Bracket	C
STD Bracket	D

DISK THICKNESS (mm)	
STD =	30

DEVIATION CODE	
No Switches	100
On / Off Switches Only	101
Pad Wear & On / Off Switches PNP	102
Pad Wear & On / Off V/F	105/115
4-20mA Switches	110

COMMON FEATURES	
Weight excl. Bracket (kg)	68
Bracket Weight (kg)	24
Brake pad width (mm)	130
Area brake pad Organic cm^2	290
Max wear of pad Sintered Metal cm^2	200
Max wear of pad half mm	10
Pressure connection ports BSPP	2x1/4″
Drain connection ports BSPP	1x1/8″
Min pipe size (mm,ID)	8
Max operating pressure (bar)	230
Temperature range ºC	-20 to 70
Minimum Disc thickness (mm)	20
Minimum Disc diameter (mm)	500
Max outer coupling diameter (mm) = disc diameter less	300

Caliper Model	Clamping Force N	Braking Force N	% Force loss/mm %	Balance Pressure @ 1mm bar	Pressure at full retraction bar
310	10000	8000	4%	14	16
312	12000	9600	3%	17	18
315	15000	1200	4%	22	23
317	17000	13600	2%	25	26
320	20000	16000	5%	29	34
322	22000	17600	5%	32	35
325	25000	20000	4%	36	39
327	27000	21600	3%	39	43
330	30000	24000	3%	43	47
335	35000	28000	4%	51	55
337	37000	29600	2%	54	57
340	40000	32000	4%	58	64
345	45000	36000	3%	65	69
350	50000	40000	6%	72	80
355	55000	44000	5%	80	86
360	60000	48000	4%	87	94

CUSTOM SAFE BRAKES
INTELLIGENT BRAKING.

CSBH3000

The CSBH 3000 is a spring applied / hydraulic release brake caliper, fail-safe disc brake with a clamping force up to 160kN.

Designed in Australia for the harsh mining and marine environments.

Mechanical safety lockout

On / Off and pad wear proximity switches on both caliper halves

Organic or sintered metal brake pads.

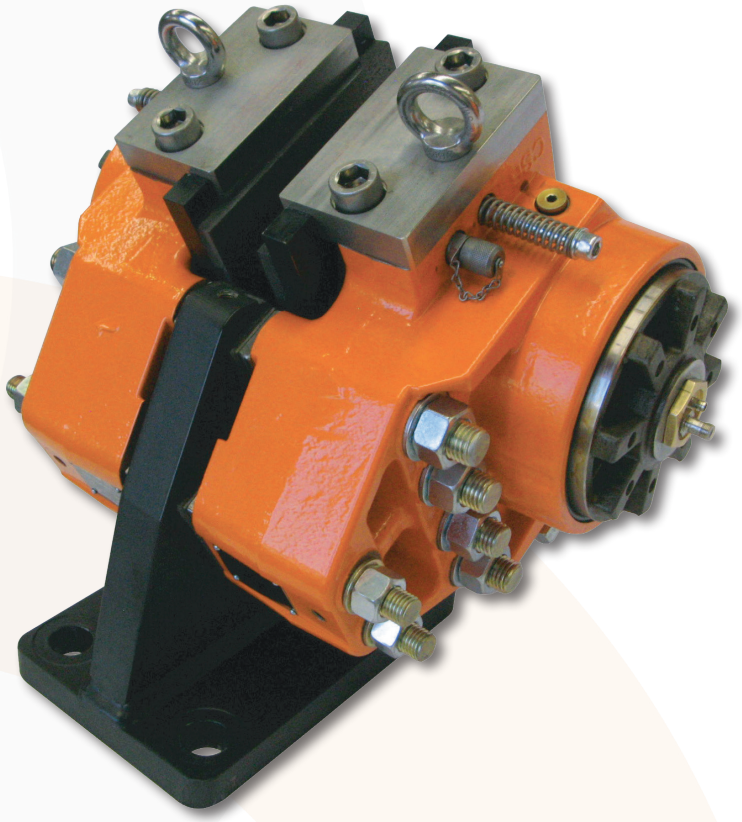

COMMON FEATURES	
Weight excl. Bracket (kg)	**130**
Bracket Weight (kg)	**28**
Brake pad width (mm)	**200**
Area brake pad Organic cm^2	**596**
Max wear of pad Sintered Metal cm^2	**360**
Max wear of pad half mm	**10**
Pressure connection ports BSPP	**2x1/4˝**
Drain connection ports BSPP	**2x1/8˝**
Min pipe size (mm,ID)	**8**
Max operating pressure (bar)	**230**
Temperature range ºC	**-20 to 70**
Minimum Disc thickness (mm)	**20**
Minimum Disc diameter (mm)	**800**
Max outer coupling diameter (mm) = disc diameter less	**412**

Caliper Model	Clamping Force N	Braking Force N	% Force loss/mm %	Balance Pressure @ 1mm bar	Pressure at full retraction bar
3010	10000	8000	4%	8	38
3020	20000	1600	3%	16	46
3030	30000	24000	4%	24	54
3040	40000	32000	1%	31	61
3050	50000	40000	4%	39	69
3060	60000	48000	3%	47	77
3070	70000	56000	6%	55	85
3080	80000	64000	3%	63	93
3090	90000	72000	3%	71	101
3100	100000	80000	6%	79	109
3110	110000	88000	6%	87	117
3120	120000	96000	5%	94	124
3150	150000	120000	8%	118	145
3160	160000	128000	7%	126	155

CSB CODE CSB **3** **010** **30** **D** **100**

BRAKE SERIES	
200 Series	2xx
300 Series	3xx
3000H Series	3xxx
5000 Series	5xxx

SPRING FORCE kN	
200 Series	0.5 to 12
300 Series	10 to 60
3000H Series	10 to 160
5000 Series	50 to 275

BRACKET OPTION	
No Bracket	A
90º Bracket	B
Special Bracket	C
STD Bracket	D

DISK THICKNESS (mm)	
STD =	30

DEVIATION CODE	
No Switches	100
On / Off Switches Only	101
Pad Wear & On / Off Switches PNP	102
Pad Wear & On / Off V/F	105/115
4-20mA Switches	110

CUSTOM SAFE BRAKES
INTELLIGENT BRAKING.

CUSTOM SAFE BRAKES
INTELLIGENT BRAKING.

Technical Images

CSBH3000

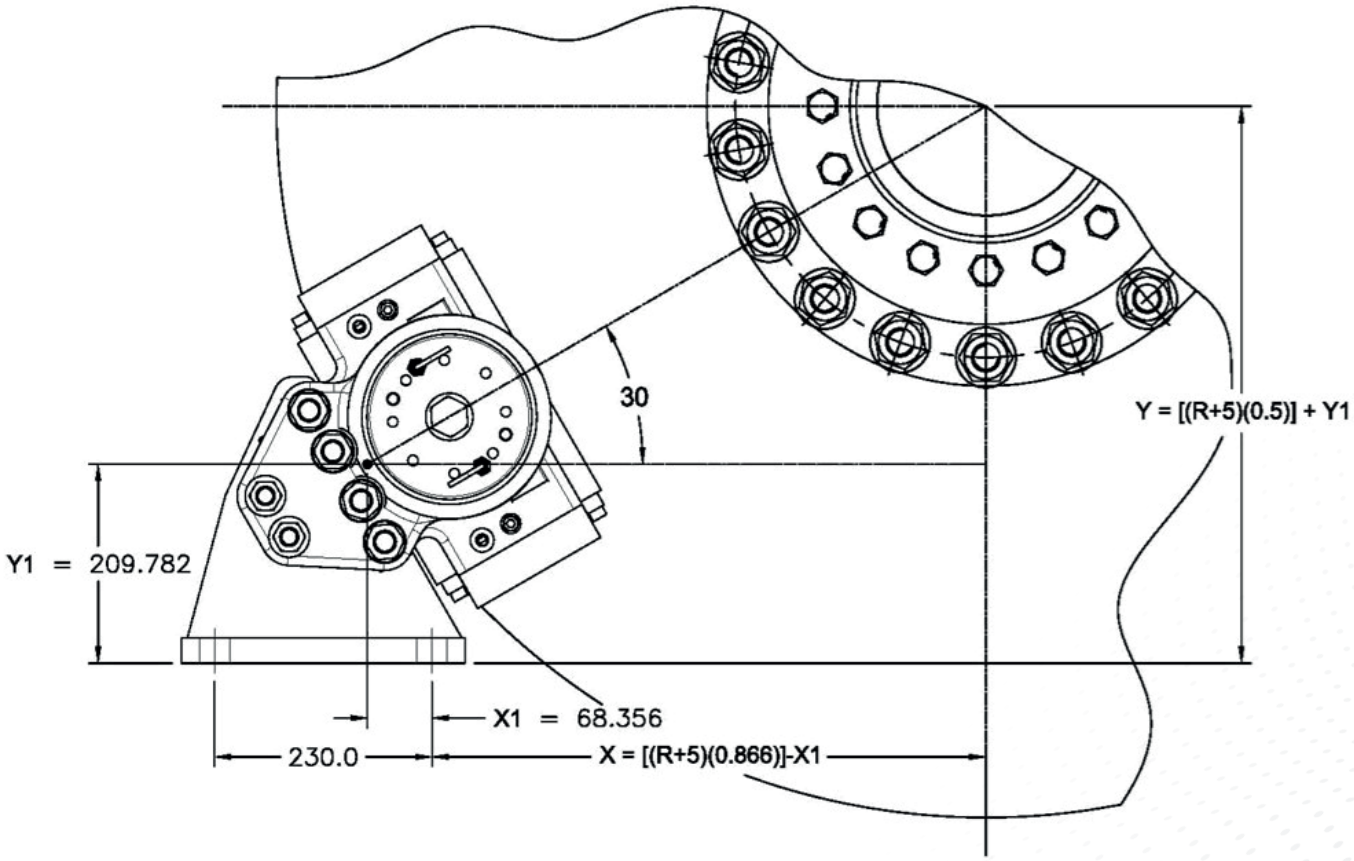

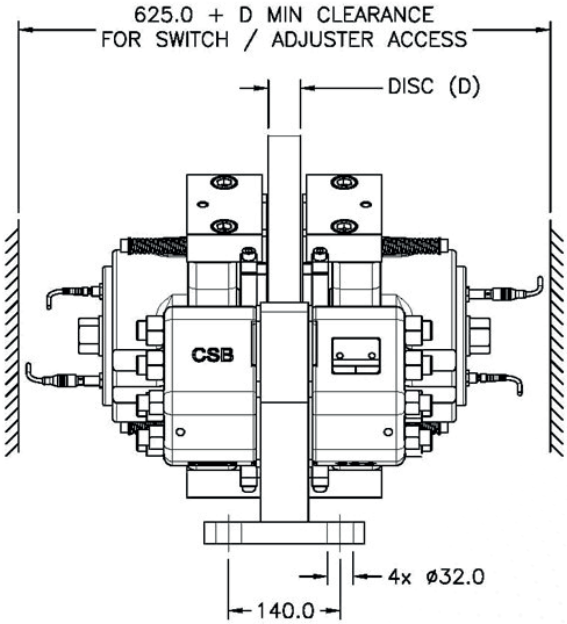

CSBH5000

The CSBH 5000 is a spring applied / hydraulic release brake caliper, fail-safe disc brake with a clamping force up to 275kN.

- Designed in Australia for tough mining conditions
- Mechanical safety lockout
- On / Off and pad wear proximity switches on both caliper halves
- Organic or sintered metal brake pads
- Designed and manufactured in Australia.

COMMON FEATURES

Weight excl. Bracket (kg)	**380**
Brake pad width (mm)	**200**
Area brake pad Organic cm^2	**630**
Max wear of pad half mm	**11**
Pressure connection ports BSPP	**2x3/8″**
Drain connection ports BSPP *(4 drain ports, 2 different sizes)*	**2x1/4″ 2x3/8″**
Min pipe size (mm,ID)	**8**
Max operating pressure (bar)	**230**
Temperature range ºC	**-20 to 70**
Minimum Disc thickness (mm)	**30**
Minimum Disc diameter (mm)	**1000**
Max outer coupling diameter (mm) = disc diameter less	**520**

CSB CODE CSB **5** **010** **30** **D** **100**

BRAKE SERIES

200 Series	2xx
300 Series	3xx
3000H Series	3xxx
5000 Series	5xxx

SPRING FORCE kN

200 Series	0.5 to 12
300 Series	10 to 60
3000H Series	10 to 160
5000 Series	50 to 275

BRACKET OPTION

No Bracket	A
90º Bracket	B
Special Bracket	C
STD Bracket	D

DISK THICKNESS (mm)

STD =	30

DEVIATION CODE

No Switches	100
On / Off Switches Only	101
Pad Wear & On / Off Switches PNP	102
Pad Wear & On / Off V/F	105/115
4-20mA Switches	110

Caliper Model	Clamping Force N	Braking Force N	% Force loss/mm %	Balance Pressure @ 1mm bar	Pressure at full retraction bar
5050	50000	40000	1.3%	34	54
5075	75000	60000	6%	52	72
5100	100000	80000	5.1%	69	94
5125	125000	100000	3.4%	86	111
5150	150000	120000	3.7%	103	128
5175	175000	140000	4.5%	120	145
5200	200000	160000	9%	138	168
5225	250000	180000	8.3%	155	185
5250	250000	200000	8%	172	202
5275	275000	220000	7.5%	118	154

CUSTOM SAFE BRAKES
INTELLIGENT BRAKING.

CUSTOM SAFE BRAKES
INTELLIGENT BRAKING.

Technical Images

CSBH5000

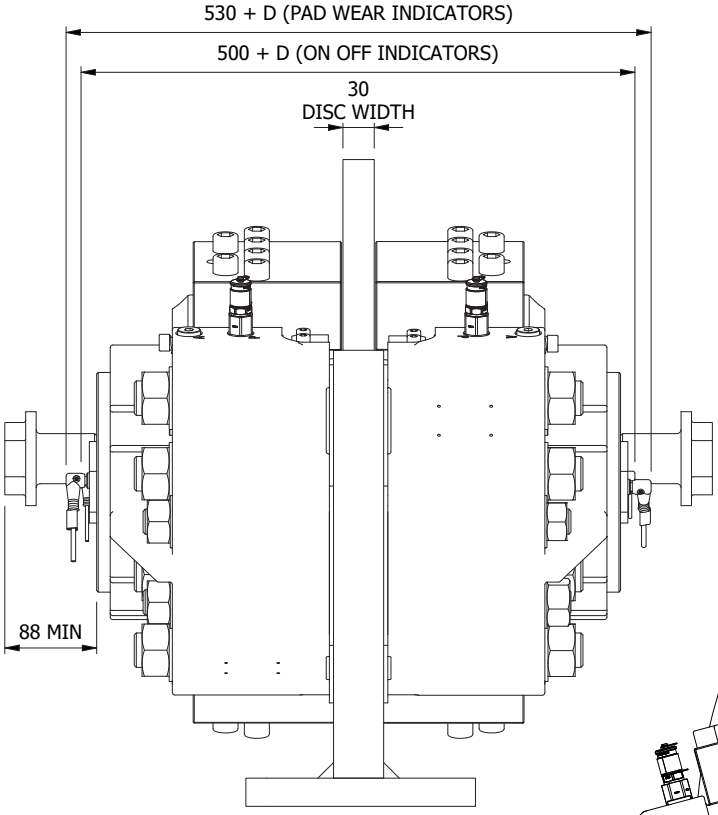

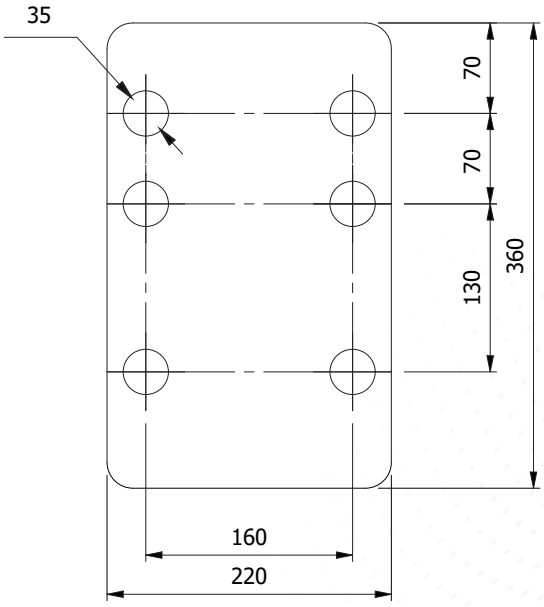

Bracket Mounting Dimensions

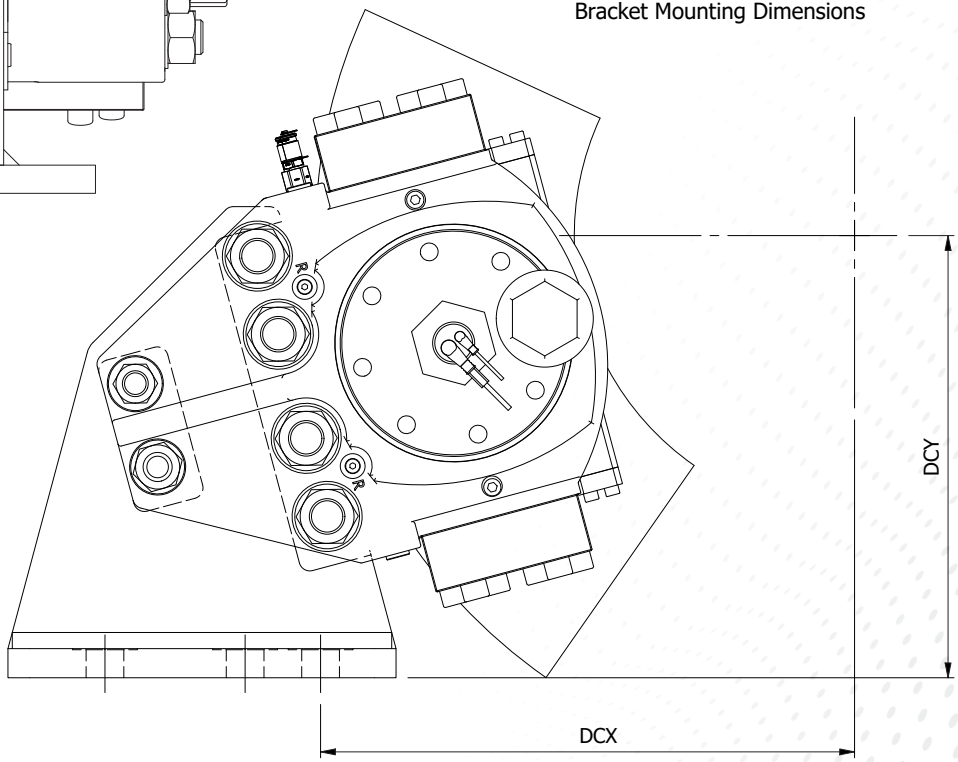

CALIPER MOUNTING DIMENSIONS
DCX = (DISC RADIUS - 110) X (0.966) + 117.2
DCY = (DISC RADIUS - 110) X (0.259) + 307.9

AUSTRALIAN POWER UNIT

STANDARD FEATURES

MODULAR SYSTEM - flexible design options allowing for easy upgrade, size selection of pump, motor, reservoir and operating controls to suit your braking needs

COMPACT SIZE - increases your mounting location options and reduces weight

COMPREHENSIVE MANUALS - with every unit in hard and electronic copy making commissioning and troubleshooting easy with all components simply marked in relation to the power unit

PURPOSE BUILT - to compliment not only the CSB range of brake calipers, can easily be setup for other brands of brake calipers

TENV ELECTRIC MOTOR - keeps the dust, dirt and water out and helps extend motor bearing life.

TENV for 0.37 & 0.75KW, TEFC for larger electrical motors

SUN CARTRIDGE VALVES - quality and reliability that comes with the best cartridge in the world

MANIFOLD - Control Manifold - Standard Aluminium with hard anodising, Ductile Iron available for systems that require higher pressure

3µm PRESSURE FILTER AND 5µm BREATHER - providing a clean reliable system

TEST POINTS – for easy testing and troubleshooting

AUSTRALIAN MADE - providing you with local support and readily available parts at economical prices

INTEGRAL HAND PUMP - provides manual release of calipers.

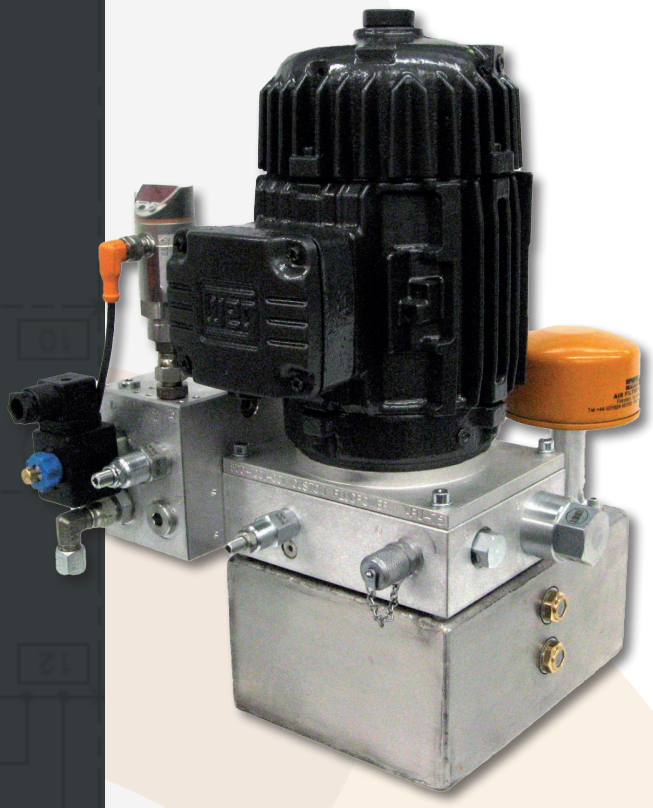

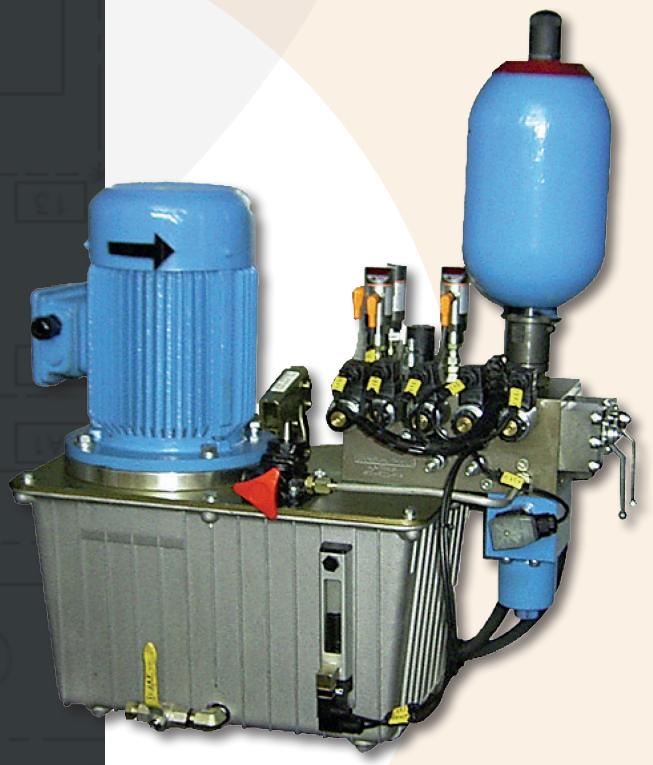

OPTIONS

Multiple control options available

Valve covers to protect and offer tamper resistance

316 stainless steel enclosures

IMF pressure switches

Larger volume tanks.

EBTC
ELECTRONIC BRAKING TORQUE CONTROL

The EBTC system has been developed to provide consistent and easily adjusted stopping times.

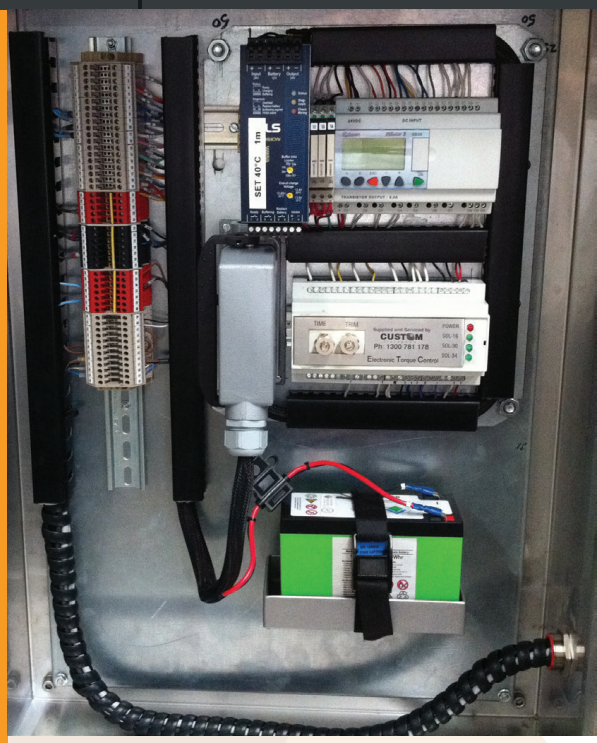

THE FEATURES AND BENEFITS ARE:

- Easy adjustment of stopping time
- Consistent times for conveyor synchronising to prevent material pile up
- Self compensating - will compensate for variations in coefficient of friction and external loading
- Allows for pad wear so calipers do not need to be adjusted as regularly
- Easy operation and setup
- Quick change out of electronic system board
- Rotary encoder fault detection
- Mechanical torque control back-up
- Independent control voltage via battery backup.

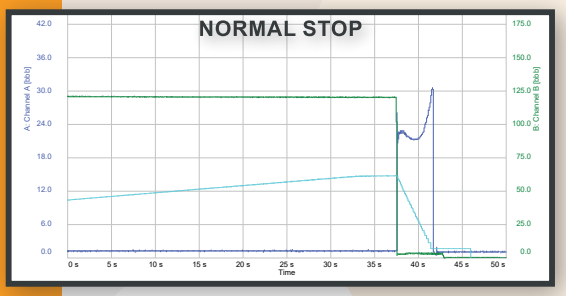

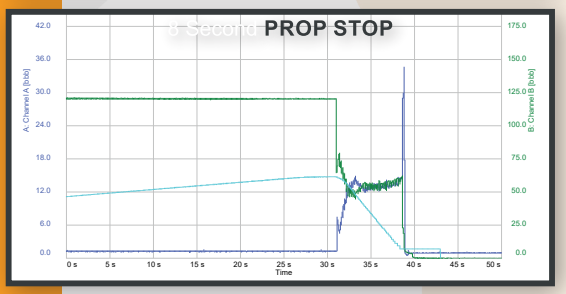

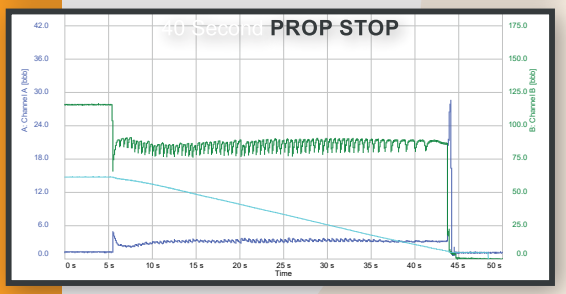

COMPARISON BRAKE TORQUE *vs* COUNTERPRESSURE GRAPHS.

CUSTOM SAFE BRAKES
INTELLIGENT BRAKING.

BRAKES POWER UNIT PORTABLE DATA LOGGER

THE FEATURES AND BENEFITS ARE:

- Records brake lift and brake applied
- Self-contained power source
- 80 hour battery life between charges
- Small size and portability
- Switch on and go
- LED outputs to inform state of data recorder.

INFORMATION GAINED PRIOR TO MAINTANANCE SHUTDOWN

- Internal leakage detection
- Pump output deterioration
- Gas pressure in accumulator
- Pressure switch settings and operation
- Counter pressure settings.

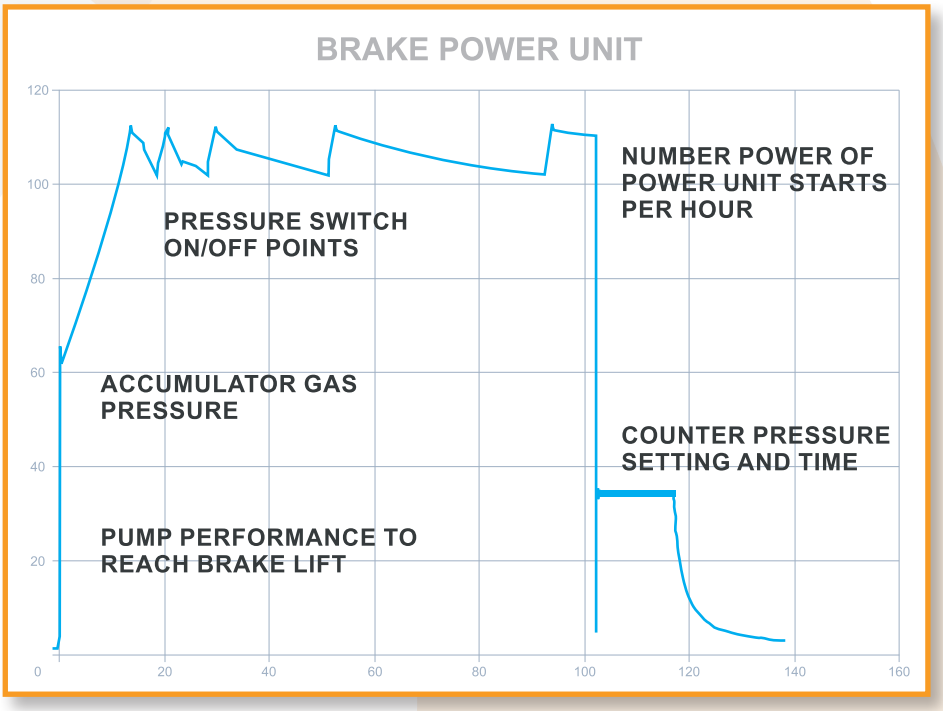

CUSTOM SAFE BRAKES
INTELLIGENT BRAKING.

CUSTOM®
SAFE BRAKES
INTELLIGENT BRAKING.

BRISBANE
36 Huntington Place
Banyo QLD 4014
PO Box 1143
Eagle Farm QLD 4009
P: +61 (07) 3307 8200

GLADSTONE
20 Beckinsale Street
Gladstone QLD 4680
PO Box 7247
Gladstone QLD 4680
P: +61 (07) 4977 9300

MACKAY
53 Diesel Drive
Paget QLD 4740
PO Box 10097
Mt Pleasant QLD 4740
P: +61 (07) 4963 7111

MELBOURNE
Suite 3, Level 2,
541 Blackburn Road,
Mount Waveley VIC 3149
P: +61 (03) 8481 3300

NEWCASTLE – Head Office
14 Gross Street
Carrington NSW 2294
PO Box 230
Carrington NSW 2294
P: +61 (02) 4953 5777

PERTH
10 Aitken Way
Kewdale WA 6105
P: +61 (08) 9441 3200
PO Box 434
Welshpool DC WA 698

PORT HEDLAND
Unit 7 / 37
Pinnacles Street
Wedgefield WA 6721
P: +61 (08) 9441 3200

SINGLETON
12 Magpie Street
Singleton NSW 2330
PO Box 2001
Singleton NSW 2330
P: +61 (02) 6575 5500

CUSTOM® fluidpower

A HELIOS TECHNOLOGIES COMPANY

Please email all enquries to

brakes@custom.com.au

custom.com.au

Custom Fluidpower Pty Ltd
ABN 61 090 926 659